THESE DRAWINGS ARE THE PROPERTY OF QUALTEK ELECTRONICS AND NOT TO BE REPRODUCED FOR OR COMMUNICATED TO A THIRD PARTY WITHOUT THE EXPRESS WRITTEN PERMISSION OF AN OFFICER OF QUALTEK ELECTRONICS.

REVISION			
REV.	DESCRIPTION	DATE	APPROVED

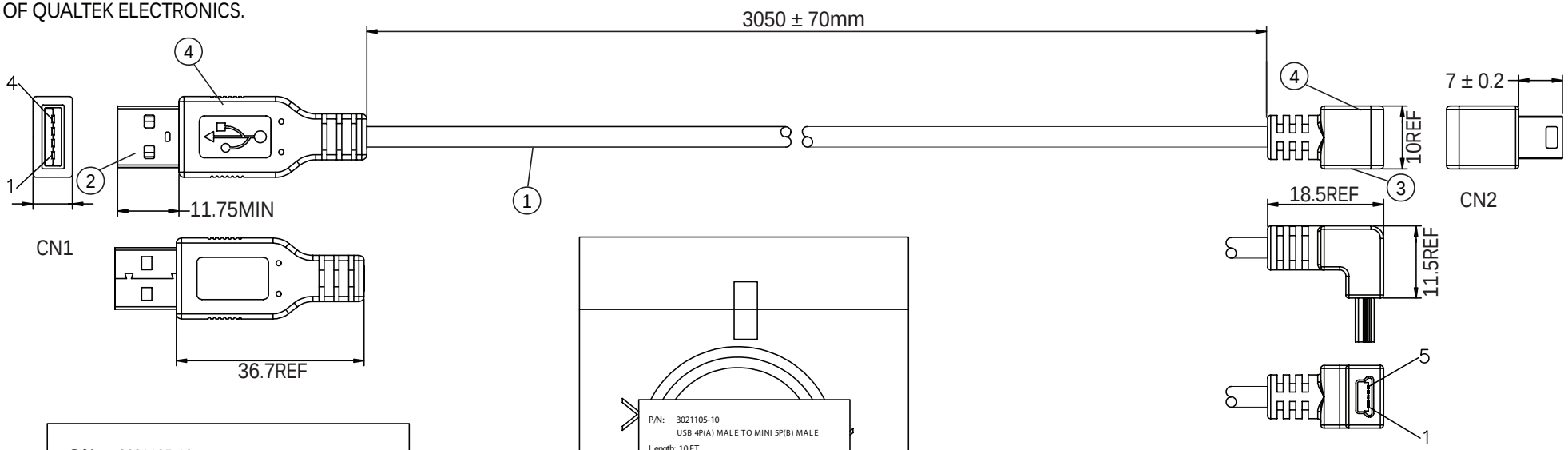

P/N: 3021105-10
USB 4P(A) MALE TO MINI 5P(B) MALE
Length: 10FT
Color:White

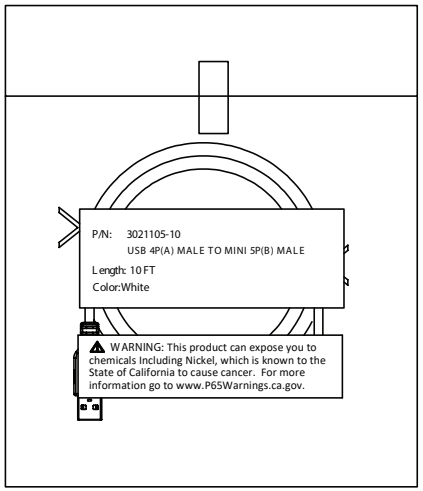

CONNECTION

CN1		CN2
1	RED	1
2	WHITE	2
3	GREEN	3
4	BLACK	5
SHELL	BRAID&DRAIN	SHELL

NOTES:
1. CABLE: UL2725
   28AWGx1PR+24AWGx2C+ AEB(AL) 65%
   OUTER JACKET: WHITE, OD: 4.2 ± 0.2mm
2. CONNECTOR: USB 2.0 A TYPE MALE
   INSULATOR: WHITE PBT
   PIN G/F
   NICKEL PLATED SHELL
3. CONNECTOR: MiNI USB 2.0 (B) 5P/M TYPE MALE
   INSULATOR: BLACK PBT
   PIN G/F
   NICKEL PLATED SHELL
4. PVC MOLDED: COLOR 45P WHITE
5. ELECTRICAL TEST:
   <1>.100% OPEN SHORT & MISS WIRE TEST
   <2>.INSULATION RESISTANCE: AC 300V DC300V 10M ohm MIN.
   <3>.CONDUCTOR RESISTANCE: 1 ohm MAX.
6. PACKING: 1PC/POLYBAG W/ LABEL

CONTROLLED

Dim range (mm)	Tolerance +/- (mm)
0-1	0.40
1-6	0.45
6-18	0.50
18-50	0.60
50-120	0.70
120-250	0.90
250-500	1.20

Qualtek Electronics Corp.
WCI DIVISION

Part Number: 3021105-10 RoHS Compliant

Description: USB 4P(A)/M - MINI USB 5P(B)/M

UNIT: mm

Drawn / Date	Checked / Date	Approved / Date
R. Nuti 03-05-19	03-05-19	LY / 03-05-19